DATASHEET - C22-DH-W-X1-K11

Pushbutton, Extended, momentary, 1 NC, 1 N/O, Screw connection, White, inscribed, Bezel: titanium

Part no.	**C22-DH-W-X1-K11**
Catalog No.	**132444**
Alternate Catalog No.	**C22-DH-W-X1-K11**

Delivery program

Product range		RMQ Compact
Basic function		Pushbutton actuators
Single unit/Complete unit		Complete unit
Design		Extended
		momentary
Connection type		Screw connection
Button plate		
button plate		White
Button plate		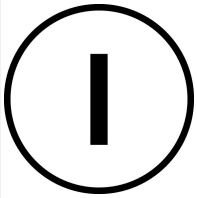
		inscribed
Name		I
Degree of Protection		IP66, IP67, IP69
Front ring		Bezel: titanium
Connection to SmartWire-DT		no
Contacts		
N/C = Normally closed		1 NC
N/O = Normally open		1 N/O
Notes		= safety function, by positive opening to IEC/EN 60947-5-1
Actuator travel and actuation force as per DIN EN 60947-5-1, K.5.4.1		
	mm	4.65
Maximum travel	mm	5.7
Minimum force for positive opening	N	20
Contact sequence		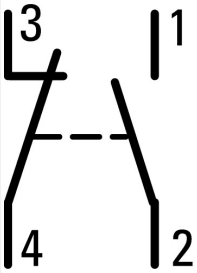
Contact travel ■ = Contact closed □ = Contact open		
Contact diagram		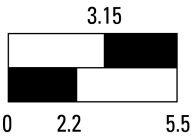 Zw = 4.5 mm
Positive opening (ZW)		yes

Technical data

General

Standards			IEC/EN 60947-5-1 VDE 0660
Lifespan, mechanical	Operations	x 10^6	> 5
Operating frequency	Operations/h		≦ 3600
Actuating force		n	≦ 5
Climatic proofing			Damp heat, constant, to IEC 60068-2-78 Damp heat, cyclic, to IEC 60068-2-30
Degree of Protection			IP66, IP67, IP69
Ambient temperature			
Open		°C	-25 - +70
Storage		°C	- -30 - + 80
Mounting position			As required
Terminal capacities		mm^2	
Solid		mm^2	2 x 0.5 - 1.5_x
Flexible with ferrule		mm^2	2 x 0.5 - 1.5_x
Tightening torque for terminal screw		Nm	0.8

Contacts

Rated impulse withstand voltage	U_{imp}	V AC	4000
Rated insulation voltage	U_i	V	250
Rated conditional short-circuit current	I_q	kA	1
Overvoltage category/pollution degree			III/3
Max. short-circuit protective device			
Fuse	gG/gL	A	10

Design verification as per IEC/EN 61439

Technical data for design verification			
Operating ambient temperature min.		°C	-25
Operating ambient temperature max.		°C	70

Technical data ETIM 7.0

Low-voltage industrial components (EG000017) / Push button, complete (EC001028)

Electric engineering, automation, process control engineering / Low-voltage switch technology / Command and alarm device / Push-button actuator, complete unit (ecl@ss10.0.1-27-37-12-28 [AKF046014])

Number of command positions			1
Type of button			High
Colour button			White
Construction type lens			Round
Hole diameter		mm	22.5
Width opening		mm	0
Height opening		mm	0
Suitable for illumination			No
Switching function latching			No
Spring-return			Yes
Supply voltage lamp		V	0
Number of contacts as normally open contact			1
Number of contacts as normally closed contact			1
Number of contacts as change-over contact			0
Type of electric connection			Screw connection
With front ring			Yes
Material front ring			Plastic
Colour front ring			Other
Degree of protection (IP)			Other
Degree of protection (NEMA)			

Approvals

Product Standards		IEC/EN 60947-5-1; UL 508; CAN/CSA-C22.2 No. 14-05 und 94-M91; CE marking
UL File No.		E29184
UL Category Control No.		NKCR
CSA File No.		165628
CSA Class No.		321103
North America Certification		UL listed, CSA certified
Degree of Protection		1,3R,4X,12,13

Dimensions

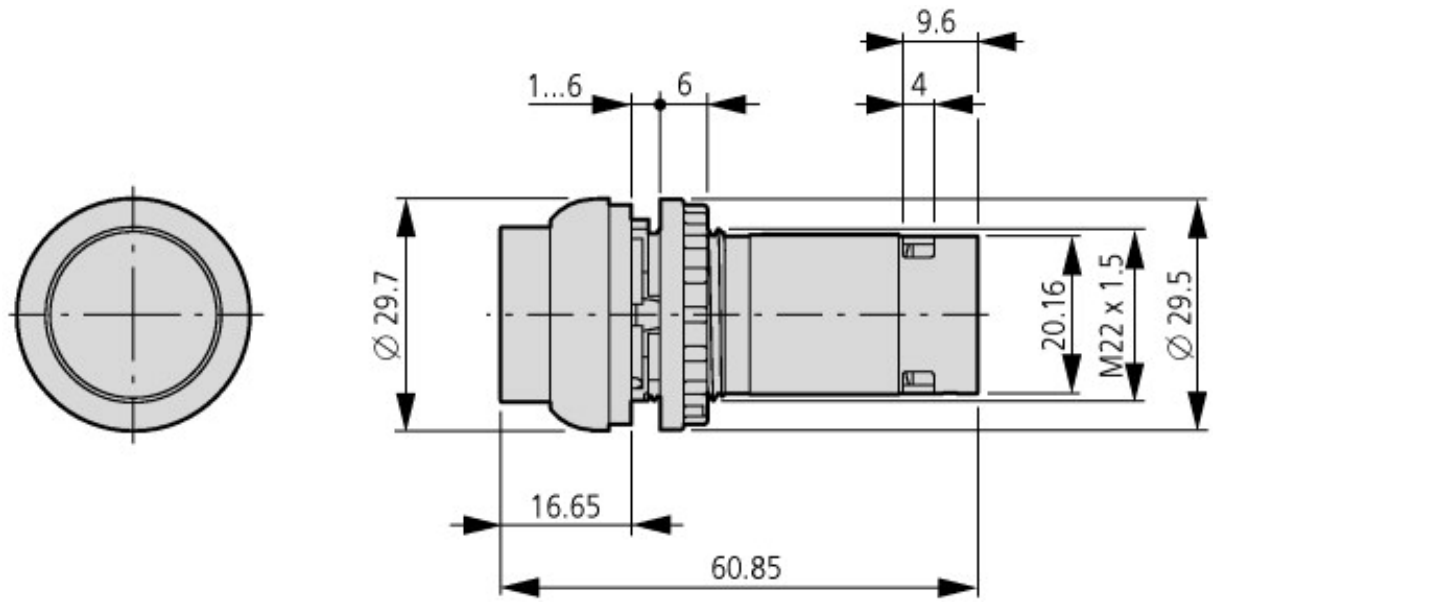

Additional product information (links)

IL04716025Z RMQ-Titan: compact programm	
IL04716025Z RMQ-Titan: compact programm	https://es-assets.eaton.com/DOCUMENTATION/AWA_INSTRUCTIONS/IL04716025Z2019_05.pdf

© 12/2020 by Eaton Industries GmbH